DRG No
BL/D14411/01-05 INST

USED ON -

REMOVE ALL SHARP EDGES UNLESS SPECIFIED

THIRD ANGLE PROJECTION

DO NOT SCALE - ASK

THIS DRAWING IS THE PROPERTY OF BROWNELL LTD,AND MAY NOT BE COPIED OR REPRODUCED WITHOUT THEIR PRIOR WRITTEN PERMISSION

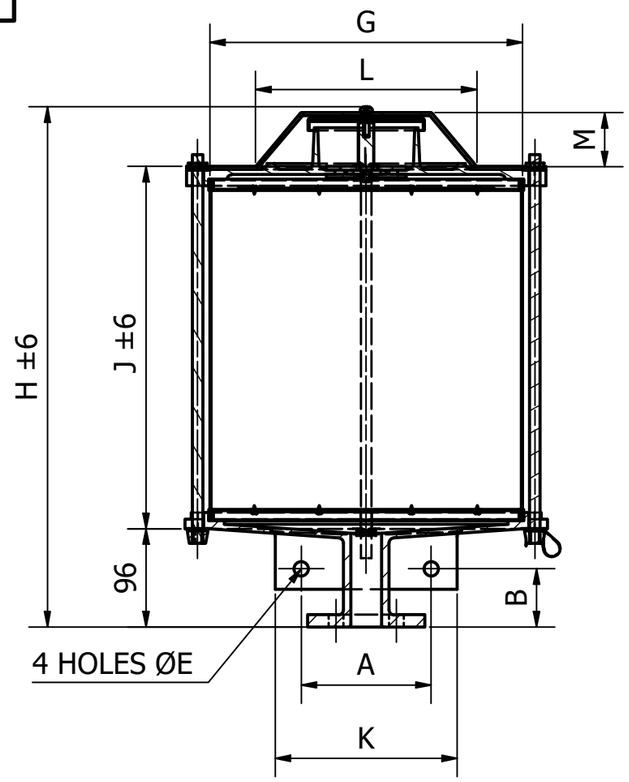

A-A (1 : 6)

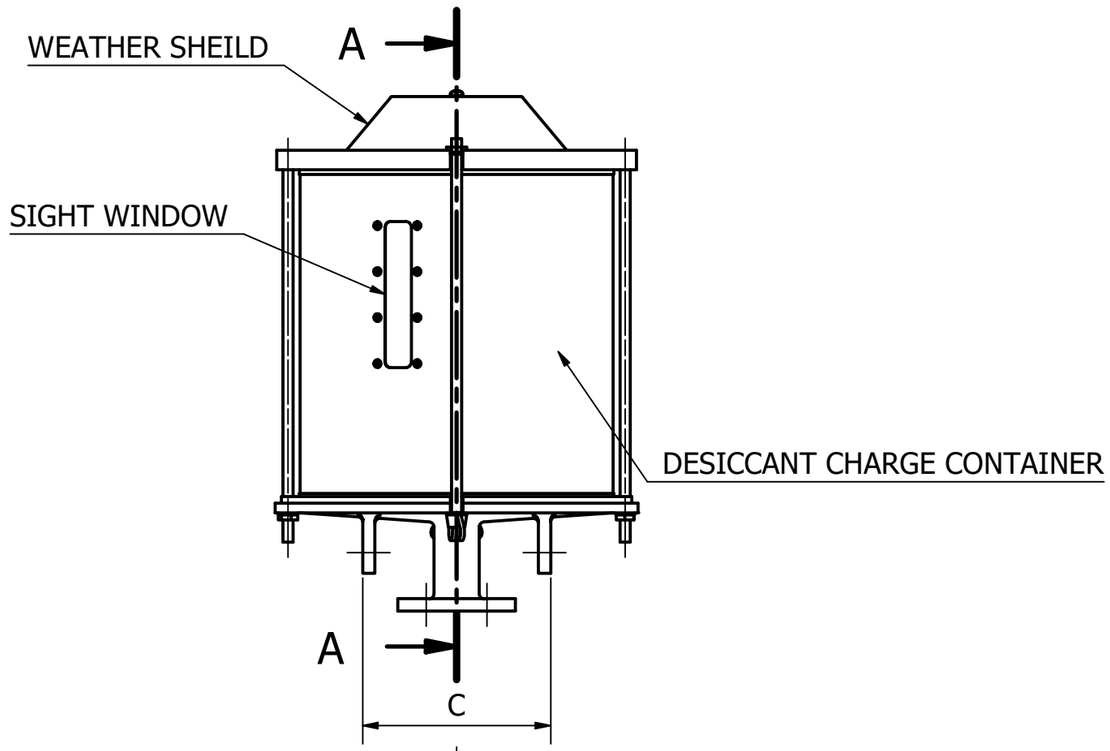

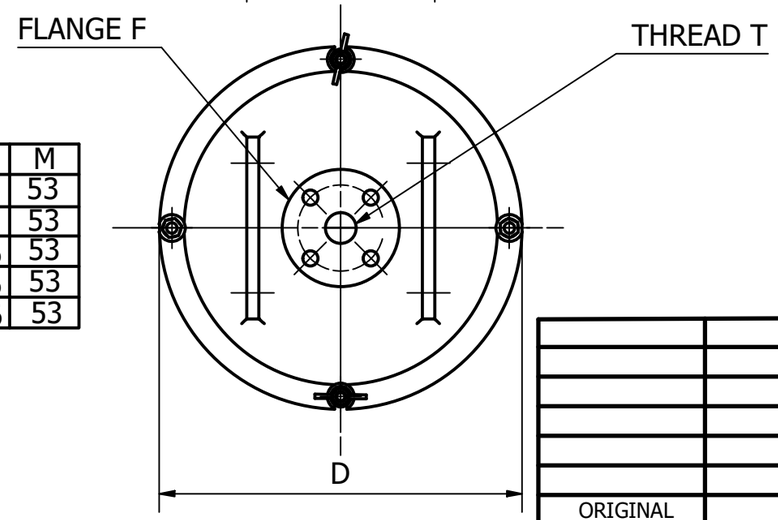

PART No.	MODEL	A	B	C	D	E	FLANGE F	G	H	J	K	L	M
BL/D14411/01	V	82.5	57	155.5	255	14	1" BSTD	207	390	227	127	216	53
BL/D14411/02	W	82.5	57	155.5	255	14	1" BSTD	207	561	407	127	216	53
BL/D14411/03	X	82.5	57	155.5	255	14	1" BSTD	207	750	587	127	216	53
BL/D14411/04	Y	127	57	184	355	14	1" BSTD	306	496	342	178	216	53
BL/D14411/05	Z	127	57	184	355	14	1" BSTD	306	660	502	178	216	53

PART No.	THREAD T	CHARGE
BL/D14411/01	3/4" BSPP	3.6Kg
BL/D14411/02	3/4" BSPP	7.2Kg
BL/D14411/03	3/4" BSPP	10.8Kg
BL/D14411/04	1" BSPP	14.4Kg
BL/D14411/05	1" BSPP	21.6Kg

CHANGE	MOD No	ISSUE	DATE
ORIGINAL		1	18/07/23

MATERIAL
ALUMINIUM & MILD STEEL

EST. WT. ----

PROTECTIVE FINISH
ALUM - ANODISE OR EPOXY PAINT
M.STEEL-PHOSPHATE & POLYESTER POWDER COAT

UNLESS OTHERWISE STATED	ANGULAR DIMS	LINEAR DIMS
	± 0.5°	0 = ± 0.5 0.0 = ± 0.25 0.00 = ± 0.05
SURFACE ROUGHNESS		3.2 µ m (N8)
DIMENSIONS IN in/mm		mm
SCALE (ORIGINAL)		1:6

BROWNELL Ltd. LONDON NW10 7XF

TITLE
REVERSE MOUNTED TRANSFORMER BREATHER WITH WEATHER SHIELD

RED DOT=ORIGINAL
BLACK DOT=COPY

DRAWN JS

CHECKED NP

DRAWING NUMBER
BL/D14411/01-05 INST