DRG No
BL/D9291

USED ON ——

THIRD ANGLE PROJECTION

REMOVE ALL SHARP EDGES UNLESS SPECIFIED

DO NOT SCALE – ASK

0 5 10 20 30 40 50 60 70 mm
0 0.5 1 2 3 INS
BASIC SCALE

THIS DRAWING IS THE PROPERTY OF BROWNELL LTD,AND MAY NOT BE COPIED OR REPRODUCED WITHOUT THEIR PRIOR WRITTEN PERMISSION

NOTES UNLESS OTHERWISE SPECIFIED

1. SPECIFICATIONS:

1.1 THIS ASSEMBLY IS INTENDED FOR MOUNTING IN EITHER A FLEXIBLE BARRIER MATERIAL OR A RIGID WALL. WHEN MOUNTING IN A RIGID WALL, GASKET ADJACENT TO HEX NUT MAY BE DISCARDED AND HEX NUT REVERSED.

2. MATERIALS:

2.1 HOUSING, HEX NUT AND LOCKSCREW: ALUMINUM ALLOY.

2.2 GASKETS: IAW MIL–R–6855, CLASS II, TYPE A OR B, GRADE 60.

2.3 WINDOW: PLEXIGLAS IAW MIL–P–5425.

3. FINISH: HOUSING, HEX NUT AND LOCKSCREW ANODIZED IAW MIL–A–8625, TYPE II, CLASS 1.

4. THE FOLLOWING ITEMS FURNISHED AS PART OF THIS ASSEMBLY MAY BE PURCHASED SEPARATELY:

P/N 350051	FLANGE GASKET
350057	NECKBAND GASKET
356056–16	HEX NUT
356062	NUT GASKET

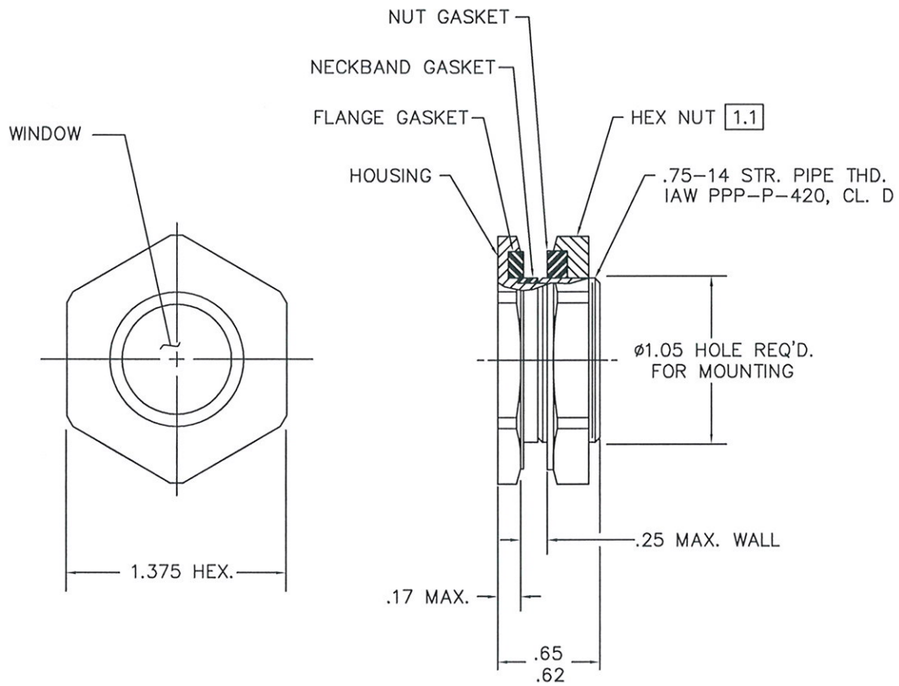

CHANGE	MOD No	ISSUE	DATE
ORIGINAL		1	22–11–06

MATERIAL	PROTECTIVE FINISH	TOLERANCES	BROWNELL Ltd. LONDON NW10 7XF	RED DOT=ORIGINAL BLACK DOT=COPY	DRAWN	CHECKED
——	——	——			PK	
EST. WT. ——		DIMENSIONS IN in/mm INS SURFACE ROUGHNESS —— SCALE (ORIGINAL) 1:1	TITLE OBSERVATION WINDOW	DRAWING NUMBER BL/D9291		