DRG No
BL/D9292

USED ON _____

THIRD ANGLE PROJECTION

REMOVE ALL SHARP EDGES UNLESS SPECIFIED

DO NOT SCALE – ASK

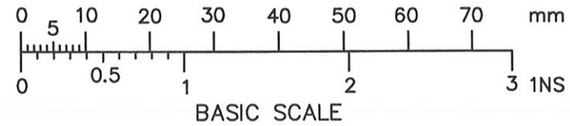

THIS DRAWING IS THE PROPERTY OF BROWNELL LTD,AND MAY NOT BE COPIED OR REPRODUCED WITHOUT THEIR PRIOR WRITTEN PERMISSION

NOTES UNLESS OTHERWISE SPECIFIED

1. THIS UNIT MAY BE MOUNTED IN EITHER FLEXIBLE OR RIGID MATERIAL WITH A MAXIMUM THICKNESS OF .15". RECOMMENDED MOUNTING HOLE SIZE IS ø1.45.

2. MATERIALS AND FINISH:

2.1 HOUSING AND HEX NUT: ALUMINUM ALLOYS.

2.2 FINISH: ALL ALUMINUM ALLOYS ANODIZED IAW MIL–A–8625, TYPE II, CLASS 1.

2.3 GASKETS: IAW MIL–R–6855, CLASS II, GRADE 60.

2.4 WINDOW: PLEXIGLAS IAW MIL–P–5425.

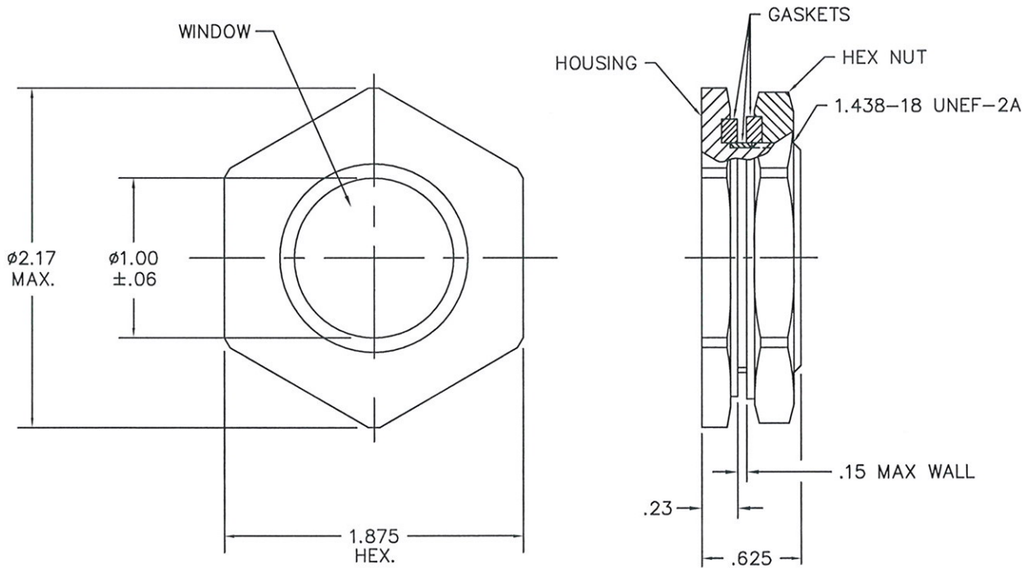

CHANGE	MOD No	ISSUE	DATE
ORIGINAL		1	22–11–06

MATERIAL	PROTECTIVE FINISH	TOLERANCES	BROWNELL Ltd. LONDON NW10 7XF	RED DOT=ORIGINAL BLACK DOT=COPY	DRAWN	CHECKED
_____	_____	_____			PK	
EST. WT. _____		DIMENSIONS IN in/mm INS SURFACE ROUGHNESS —— SCALE (ORIGINAL) 1:1	TITLE OBSERVATION WINDOW		DRAWING NUMBER BL/D9292	